TECHNICAL DATA

TANDEM ROLLERS

BW 100 AD-5, BW 120 AD-5

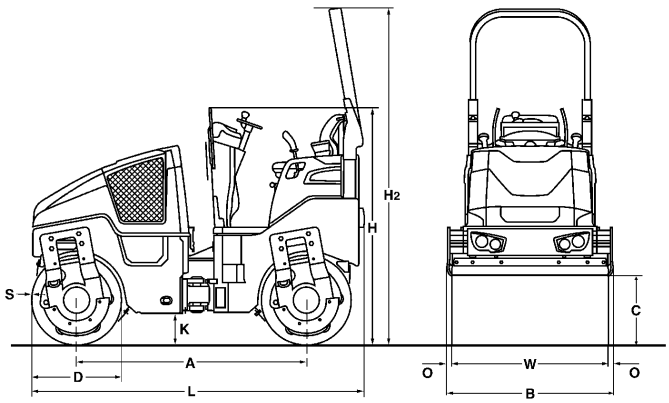

Dimensions in mm

	A	B	C	D	H	H2	K	L	O	S	W
BW 100 AD-5	1752	1072	523	700	1808	2568	254	2529	36	13	1000
BW 120 AD-5	1752	1272	523	700	1808	2568	254	2529	36	13	1200

Shipping dimensions in m3	without ROPS	with ROPS
BW 100 AD-5	4,902	6,962
BW 120 AD-5	5,816	8,261

Machine type	Compaction output (m3/h) at recommended soil layer thicknesses		
	Gravel, sand	**Mixed soil**	**Silt, clay**
BW 100 AD-5	80-145	55-105	38-73
BW 120 AD-5	85-170	65-125	43-85

Machine type	Compaction output (t/h) at different asphalt layer thicknesses		
	2-4 cm	**6-8 cm**	**10-12 cm**
BW 100 AD-5	15-40	40-60	60-100
BW 120 AD-5	20-45	40-70	70-120

Technical Data		BOMAG BW 100 AD-5	BOMAG BW 120 AD-5
Weights			
Operating weight w. ROPS CECE	kg	2.500	2.700
Average static linear load CECE	kg/cm	12,5	11,3
Grossweight	kg	3.000	3.150
Dimensions			
Working width	mm	1.000	1.200
Track radius, inner	mm	2.550	2.450
Driving Characteristics			
Speed	km/h	0- 9,0	0- 9,0
Working speed with vibration	km/h	0- 5,0	0- 5,0
Max. gradeability without/with vibr.	%	40/30	40/30
Drive			
Engine manufacturer		Kubota	Kubota
Type		D 1703	D 1703
Emission stage		Stage V / TIER4f	Stage V / TIER4f
Cooling		water	water
Number of cylinders		3	3
Performance ISO 14396	kW	18,5	18,5
Performance SAE J 1995	hp	25,0	25,0
Speed	min-1	2.200	2.200
Electric equipment	V	12	12
Driven drum		front + rear	front + rear
Brakes			
Service brake		hydrost.	hydrost.
Parking brake		hydromec.	hydromec.
Steering			
Steering system		oscil.artic.	oscil.artic.
Steering method		hydrost.	hydrost.
Steering / oscillating angle +/-	grad	32/10	32/10
Crab walk	mm	0- 50	0- 50
Exciter system			
Vibrating drum		front + rear	front + rear
Drive system		hydrost.	hydrost.
Frequency	Hz	65/56	65/56
Amplitude	mm	0,50	0,50
Centrifugal force	kN	32/24	39/29
Sprinkler System			
Type of sprinkling		pressure	pressure
Capacities			
Fuel	l	35,0	35,0
Water	l	205,0	205,0

Technical modifications reserved. Machines may be shown with options.

Standard Equipment

- ☑ Hydrostatic travel and vibration drive
- ☑ Travel drive in series
- ☑ 2 scrapers per drum, spring loaded and tiltable
- ☑ Pressure sprinkler system with interval switch
- ☑ Multi function travel lever
- ☑ Multi-function display incl. operating hour meter
- ☑ Water level
- ☑ Emergency STOP
- ☑ Individual control, vibration
- ☑ Intelligent Vibration Control (IVC)
- ☑ Integrated storage compartment
- ☑ Adjustable operator's seat
- ☑ Seat contact switch
- ☑ Vandalism protection
- ☑ 12V socket
- ☑ Working lights front and rear
- ☑ Back-up alarm
- ☑ Lashing eyes, galvanized
- ☑ Single point lifting device
- ☑ Lockable engine hood made of composite material

Optional Equipment

- ☐ * Foldable ROPS incl. seat belt
- ☐ Sun roof, foldable with ROPS
- ☐ Weather protection for sun roof
- ☐ Seat heating
- ☐ Sliding seat incl. double travel lever
- ☐ ECONOMIZER with asphalt temperature display
- ☐ Temperature display
- ☐ BOMAG TELEMATIC
- ☐ Indicator and hazard lights
- ☐ Rotary beacon
- ☐ Optional lighting on ROPS
- ☐ Battery disconnect switch
- ☐ Environmentally compliant hydraulic oil
- ☐ Theft protection
- ☐ Edge cutter
- ☐ Hydraulically adjustable crabwalk (50mm)
- ☐ Pointer
- ☐ Special painting
- ☐ Backup warning buzzer with broadband technology
- ☐ ECOSTOP
- ☐ Outside mirrors
- ☐ Tablet holder set

BOMAG
Hellerwald
D-56154 Boppard
P.O. Box 5162
Tel. (0)6742 - 1000
Fax (0)6742 - 3090